26.Shifter Fork and Rod

A: REMOVAL

1) Remove the manual transmission assembly from the vehicle. <Ref. to 6MT-34, REMOVAL, Manual Transmission Assembly.>
2) Prepare the transmission for overhaul. <Ref. to 6MT-39, Preparation for Overhaul.>
3) Remove the oil pipe, neutral position switch, back-up light switch and harness. <Ref. to 6MT-41, REMOVAL, Oil Pipe.> <Ref. to 6MT-43, REMOVAL, Neutral Position Switch.> <Ref. to 6MT-42, REMOVAL, Back-up Light Switch.>
4) Remove the extension case. <Ref. to 6MT-44, REMOVAL, Extension Case.>
5) Remove the transfer driven gear. <Ref. to 6MT-56, REMOVAL, Transfer Driven Gear.>
6) Remove the center differential. <Ref. to 6MT-58, REMOVAL, Center Differential.>
7) Remove the oil pump. <Ref. to 6MT-59, REMOVAL, Oil Pump.>
8) Remove the transmission case. <Ref. to 6MT-63, REMOVAL, Transmission Case.>
9) Remove the individual gear assemblies. <Ref. to 6MT-68, REMOVAL, Main Shaft Assembly.>

B: INSTALLATION

1) Install the individual gear assemblies all at once. <Ref. to 6MT-69, INSTALLATION, Main Shaft Assembly.>
2) Install the transmission case. <Ref. to 6MT-64, INSTALLATION, Transmission Case.>
3) Install the oil pump. <Ref. to 6MT-61, INSTALLATION, Oil Pump.>
4) Install the center differential. <Ref. to 6MT-58, INSTALLATION, Center Differential.>
5) Install the transfer driven gear. <Ref. to 6MT-56, INSTALLATION, Transfer Driven Gear.>
6) Install the extension case. <Ref. to 6MT-44, INSTALLATION, Extension Case.>
7) Install the oil pipe, neutral position switch, back-up light switch and harness. <Ref. to 6MT-41, INSTALLATION, Oil Pipe.> <Ref. to 6MT-43, INSTALLATION, Neutral Position Switch.> <Ref. to 6MT-42, INSTALLATION, Back-up Light Switch.>
8) Install the manual transmission assembly to the vehicle. <Ref. to 6MT-36, INSTALLATION, Manual Transmission Assembly.>

C: DISASSEMBLY

NOTE:
Discard the removed spring pin, and replace with a new part.

1. REVERSE SHIFTER FORK

1) Remove the reverse fork using the ST.
ST 398791700 REMOVER

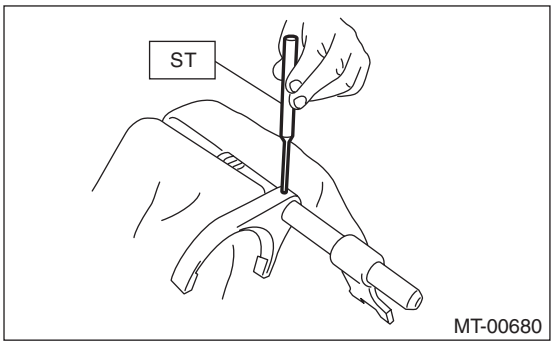

2) Remove the reverse shifter arm using the ST.
ST 398791700 REMOVER

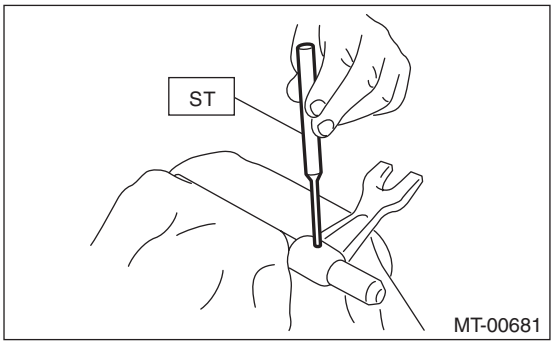

2. 1ST-2ND, 3RD-4TH SHIFTER FORK

1) Using the ST, remove the 3rd-4th shifter fork.
ST 398791700 REMOVER

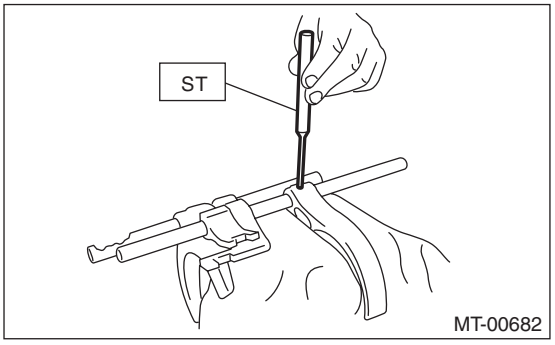

2) Using the ST, remove the 3rd-4th shifter arm.
ST 398791700 REMOVER

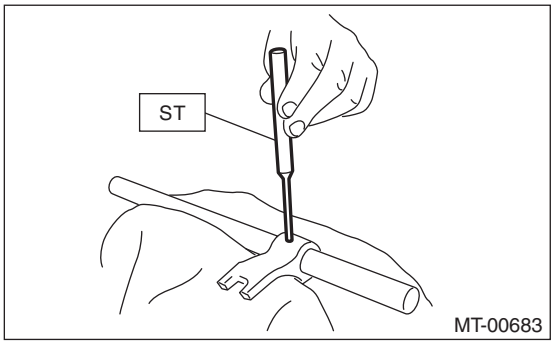

3) Using the ST, remove the 1st-2nd shifter arm and 1st-2nd shifter fork.
ST 398791700 REMOVER

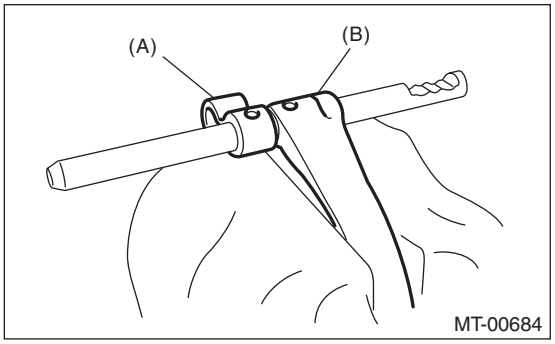

(A) 1st-2nd shifter arm
(B) 1st-2nd shifter fork

3. 5TH-6TH SHIFTER FORK

1) Using the ST, remove the 5th-6th shifter fork.
ST 398791700 REMOVER

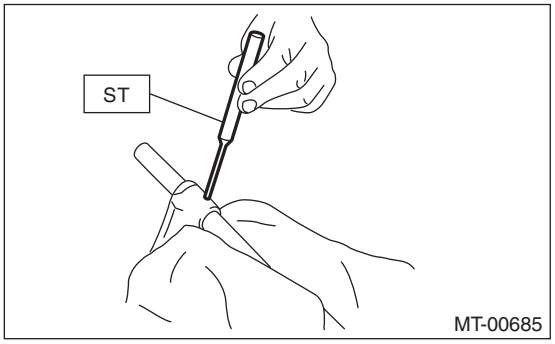

2) Using the ST, remove the 5th-6th shifter arm.
ST 398791700 REMOVER

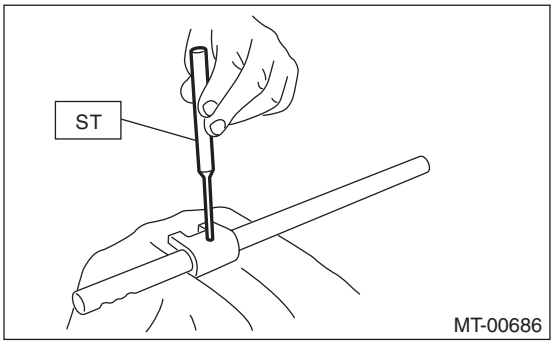

4. SHIFTER ARM SHAFT

Remove the selector arm using the ST.
ST 398791700 REMOVER

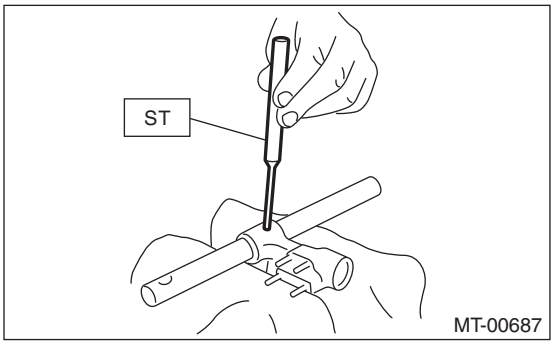

5. STRIKING ROD

1) Remove the reverse interlock block and the interlock block from the striking rod.

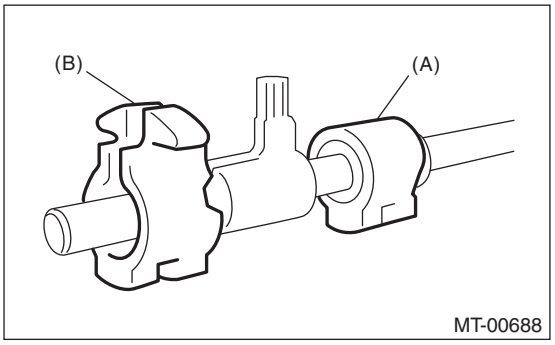

(A) Reverse interlock block
(B) Interlock block

2) Remove the reverse interlock arm using the ST.
ST 398791700 REMOVER

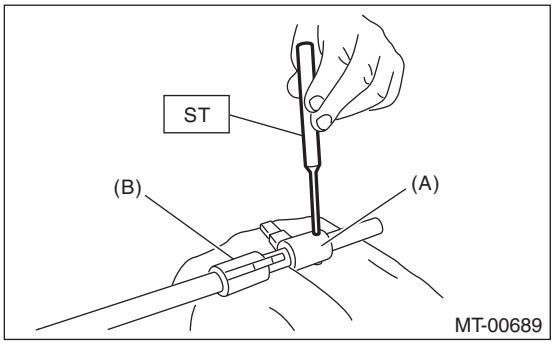

(A) Reverse interlock arm
(B) Interlock arm

3) Remove the interlock arm using the ST.
ST 398791700 REMOVER

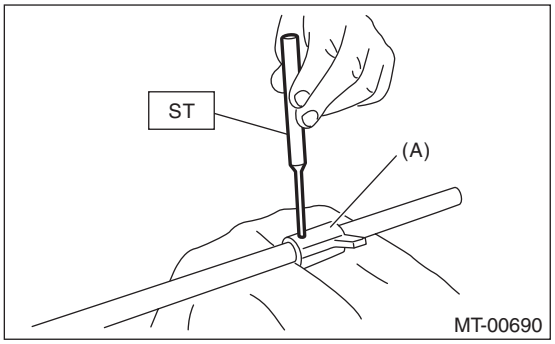

(A) Interlock arm

D: ASSEMBLY

1. REVERSE SHIFTER FORK

1) Using the ST, install the reverse fork.
ST 398791700 REMOVER

NOTE:
Confirm that the reverse fork and rod are installed in the proper direction.

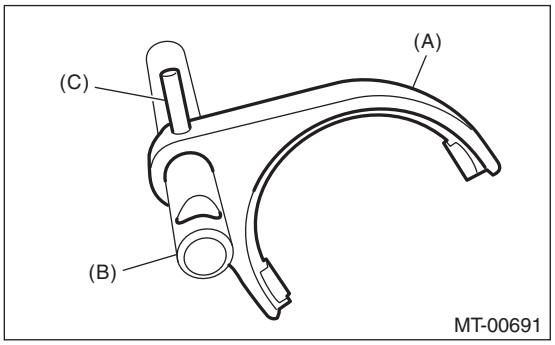

(A) Reverse fork
(B) Reverse fork rod
(C) Spring pin

2) Using the ST, install the reverse arm.
ST 398791700 REMOVER

NOTE:
Confirm that the reverse arm and rod are installed in the proper direction.

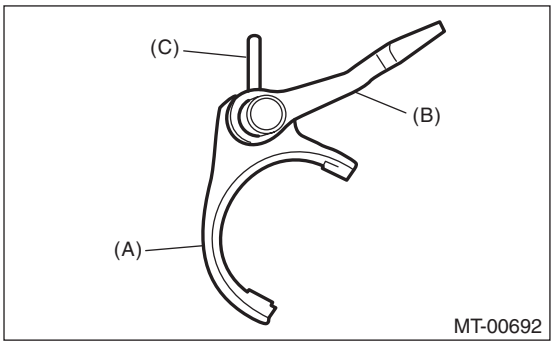

(A) Reverse arm
(B) Reverse fork rod
(C) Spring pin

2. 1ST-2ND, 3RD-4TH SHIFTER FORK

1) Using the ST, install the 1st-2nd shifter fork.
ST 398791700 REMOVER

NOTE:
Make sure that the 1st-2nd shifter fork and rod are installed in the correct direction.

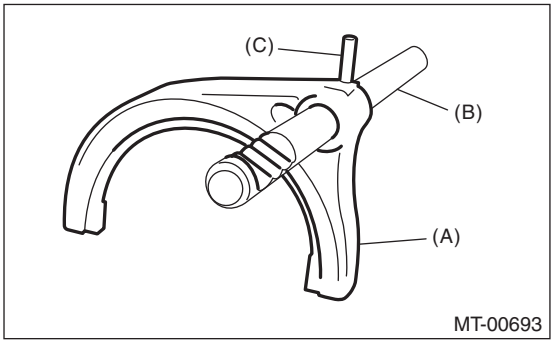

(A) 1st-2nd shifter fork
(B) 1st-2nd fork rod
(C) Spring pin

2) Using the ST, install the 1st-2nd shifter arm.
ST 398791700 REMOVER

NOTE:
Make sure that the 1st-2nd shifter arm and fork are installed in the correct direction.

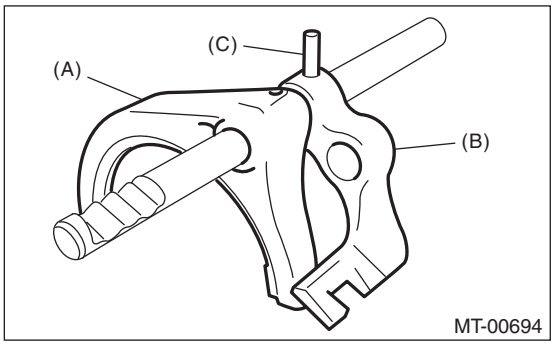

(A) 1st-2nd shifter fork
(B) 1st-2nd fork arm
(C) Spring pin

3) Using the ST, install the 3rd-4th shifter arm.
ST 398791700 REMOVER

NOTE:
Make sure that the 3rd-4th shifter arm and rod are installed in the correct direction.

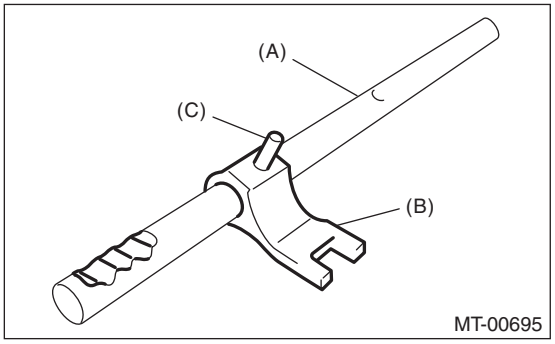

(A) 3rd-4th fork rod
(B) 3rd-4th shifter arm
(C) Spring pin

4) Attach the 3rd-4th fork rod to the 1st-2nd shifter arm.

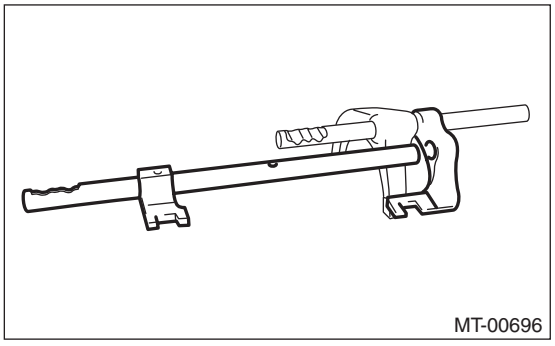

5) Using the ST, install the 3rd-4th shifter fork.
ST 398791700 REMOVER

NOTE:
Make sure that the 3rd-4th shifter fork is installed in the correct direction.

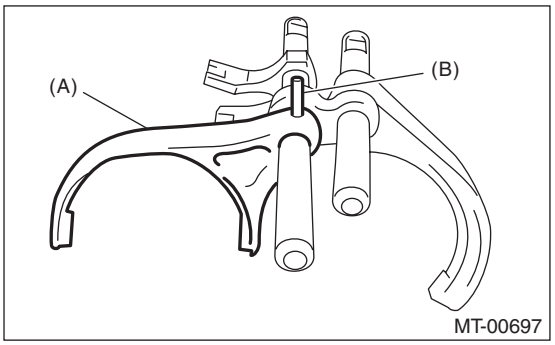

(A) 3rd-4th shifter fork
(B) Spring pin

3. 5TH-6TH SHIFTER FORK

1) Using the ST, install the 5th-6th shifter arm.
ST 398791700 REMOVER

NOTE:
Make sure that the 5th-6th shifter arm and rod are installed in the correct direction.

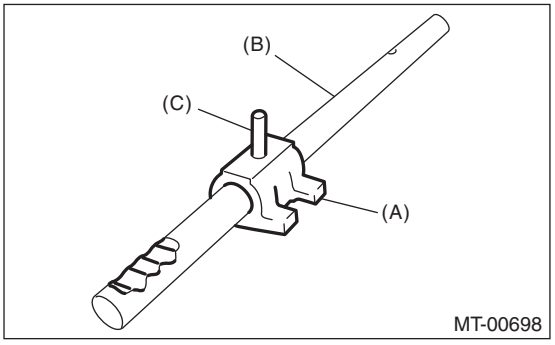

(A) 5th-6th shifter arm
(B) 5th-6th fork rod
(C) Spring pin

2) Using the ST, install the 5th-6th shifter fork.
ST 398791700 REMOVER

NOTE:
Check that the 5th-6th shifter fork and arm are installed.

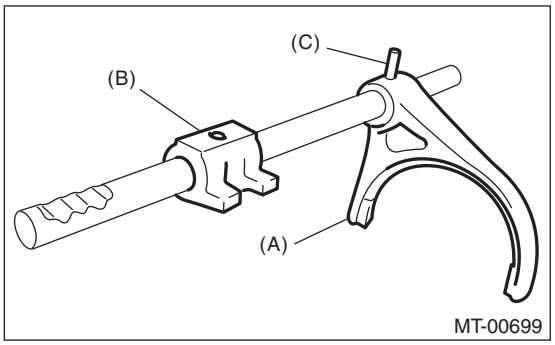

(A) 5th-6th shifter fork
(B) 5th-6th shifter arm
(C) Spring pin

4. SHIFTER ARM SHAFT

Using the ST, install the selector arm.
ST 398791700 REMOVER

NOTE:
Confirm that the selector arm and rod are installed in the proper direction.

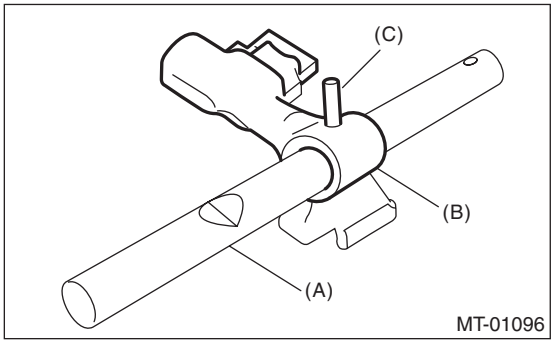

(A) Selector rod
(B) Selector arm
(C) Spring pin

5. STRIKING ROD

1) Using the ST, install the reverse interlock arm and interlock arm.
ST 398791700 REMOVER

NOTE:
• Confirm that the reverse interlock arm and rod are installed in the proper direction.
• Confirm that the interlock arm and rod are installed in the proper direction.

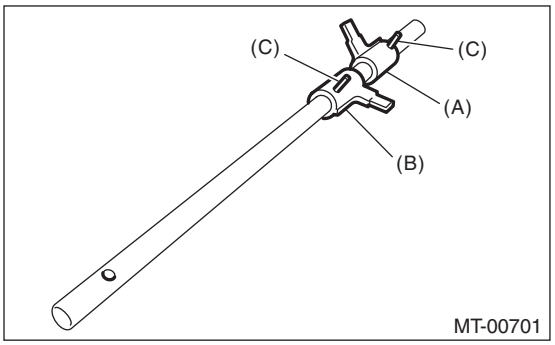

(A) Reverse interlock arm
(B) Interlock arm
(C) Spring pin

2) Attach the reverse interlock block and interlock block to the striking rod.

NOTE:
Confirm that the reverse interlock block and interlock block are installed in the proper direction.

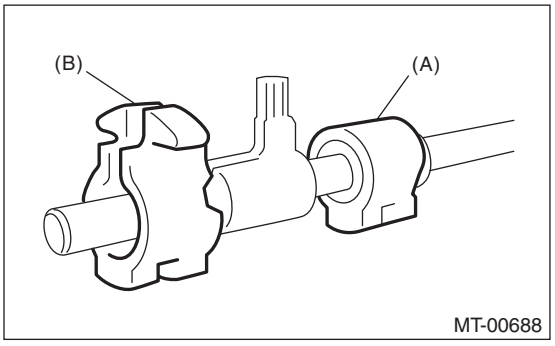

(A) Reverse interlock block
(B) Interlock block

E: INSPECTION

1) Check the shift shaft and shift rod for damage. Replace if damaged.
2) Repair or replace the gearshift mechanism if excessively worn, bent or defective in any way.

F: ADJUSTMENT

1. 1ST-2ND FORK ROD SELECTION

NOTE:
In the following conditions, perform the procedures below.
- Replacement of the 1st and 2nd driven gear
- 1st and 2nd synchro ring assembly replacement
- Adapter plate replacement
- Driven shaft replacement
- 1st-2nd hub and sleeve assembly replacement.

1) Insert the drive pinion assembly into the adapter plate.

NOTE:
Confirm that the thrust bearing outer race has not been removed and the drive pinion is not lifted.

2) Set the height gauge to the adapter plate. Lower the height gauge indicator to the mating surface of the adapter plate and case, and set to zero points.
ST 18853AA000 HEIGHT GAUGE

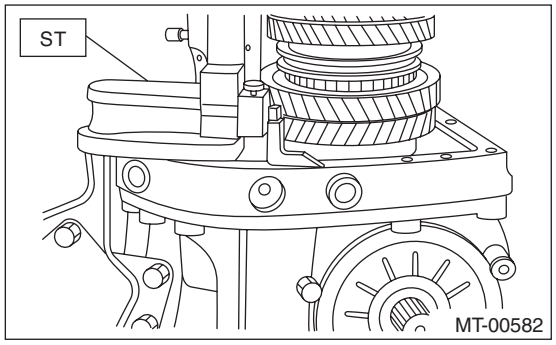

NOTE:
- The adapter plate will be the base point for the measurement. Use a scraper to remove any gasket material remaining on the end face.
- During measurement, do not place the height gauge in the shaded area shown in the figure.

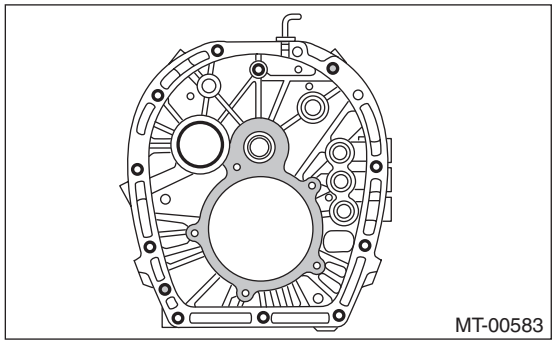

3) Select the main shaft snap ring. <Ref. to 6MT-79, ADJUSTMENT, Main Shaft Assembly.>

4) Measure “B1” and “B2” as shown in the figure.

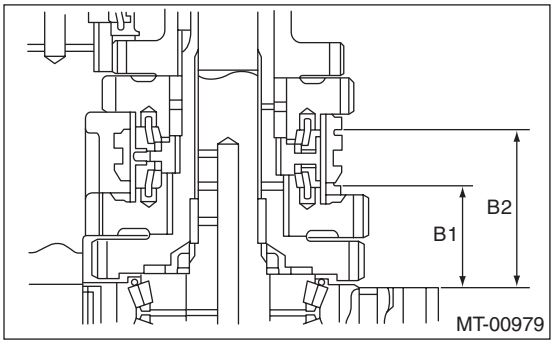

(1) Shift the 1st-2nd sleeve to the 1st driven gear side, push down to the stopper, and measure “B1”.

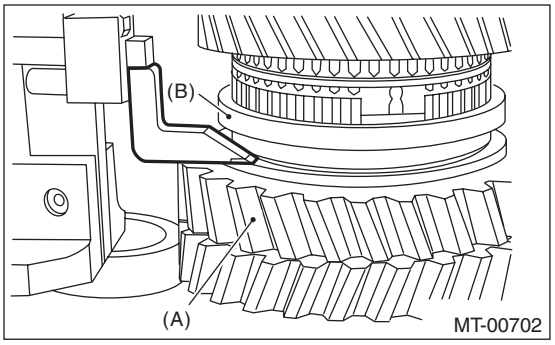

(A) 1st driven gear
(B) 1st-2nd sleeve

NOTE:
- Set the height gauge indicator near the measurement target, and lock dial (1) as shown in the figure. Turn dial (2), and set the indicator to the 1st side end surface of the sleeve.
- Turn approximately 72° at a time, and measure the sleeve in 5 locations. Round off the two highest and two lowest measurement values. The remaining center value is used as the measurement value.

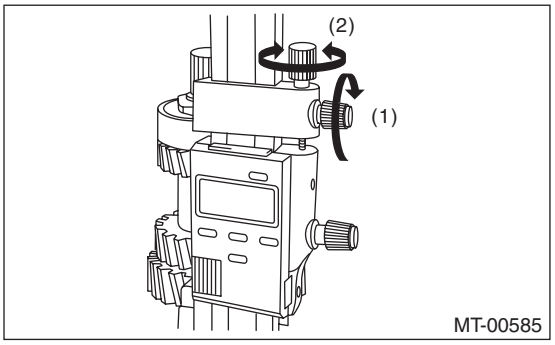

(2) Set the height gauge indicator upside down.

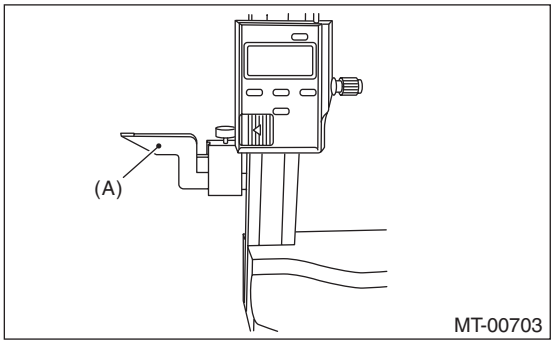

(A) Indicator

(3) Shift the 1st-2nd sleeve to the 2nd driven gear side, push up on the stopper, and measure “B2”.

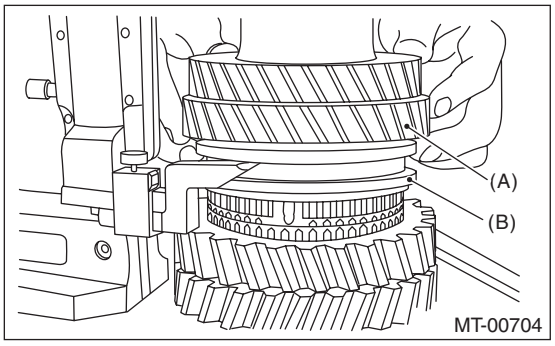

(A) 2nd driven gear
(B) 1st-2nd sleeve

NOTE:
- Set the height gauge indicator near the measurement target, and lock dial (1) as shown in the figure. Turn dial (2), and set the indicator to the 2nd side end surface of the sleeve.
- The measurement is to be performed with two persons, while holding the sleeve straight.
- Turn approximately 72° at a time, and measure the sleeve in 5 locations. Round off the two highest and two lowest measurement values. The remaining center value is used as the measurement value.

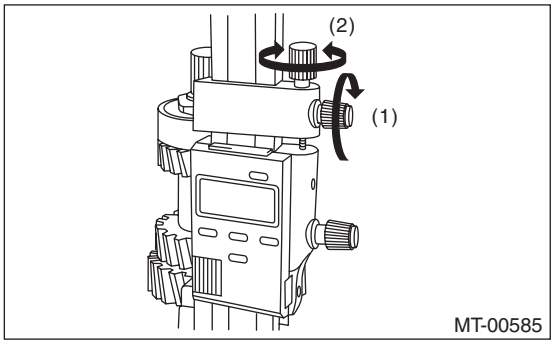

(4) According to both of the measurements, calculate the neutral position of the 1st-2nd sleeve. From the following calculation, select a fork rod which matches the calculated value.

Calculation: T = (B1 + B2) / 2

T: 1st-2nd sleeve center position
B1: Height from the adapter plate end to the sleeve end, when shifted to 1st gear
B2: Measured height from the adapter plate end to the sleeve end, when shifted to 2nd gear: +55 mm (2.17 in)

NOTE:
Attach the indicator upside down in comparison to the setting procedures for the zero point. Add “d1” [Value: 55 mm (2.17 in)] from the figure below to “B2”, and measure “B2”.

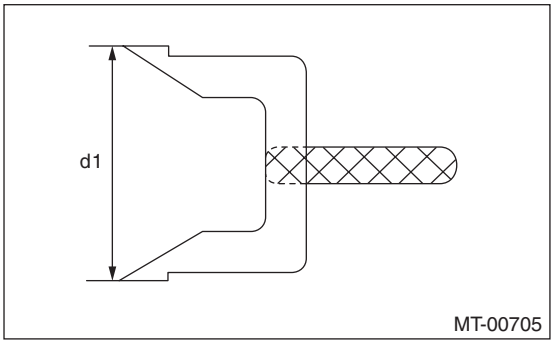

T mm (in)	Lot No. (marking)
62.93 — 63.23 (2.4776 — 2.4894)	32801AA111 (1)
63.23 — 63.53 (2.4894 — 2.5012)	32801AA131 (none)
63.53 — 63.83 (2.5012 — 2.5130)	32801AA141 (2)

2. 3RD-4TH FORK ROD SELECTION

NOTE:
In the following conditions, perform the procedures below.
- Main shaft replacement
- 3rd, and 3rd to 6th drive gear and bushing replacement
- 3rd, and 3rd to 6th synchro assembly replacement
- 3rd-4th hub and sleeve assembly replacement

1) Insert the main shaft assembly into the adapter plate.
2) Set the height gauge to the adapter plate. Lower the height gauge indicator to the top surface of the snap ring groove, and set to the zero point on the upper side of the main rear bearing.
ST 18853AA000 HEIGHT GAUGE

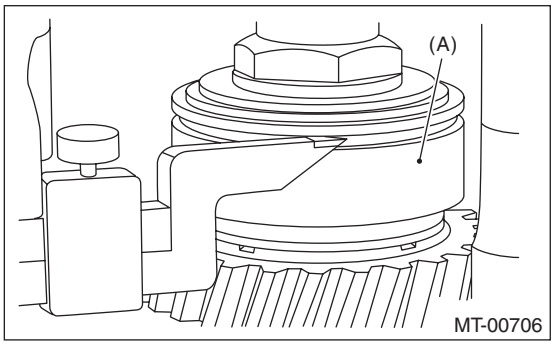

(A) Roller bearing

NOTE:
- The height gauge will be set on the adapter plate during the measurement. Use a scraper to remove any gasket material remaining on the end face.
- During measurement, do not place the height gauge in the shaded area shown in the figure.

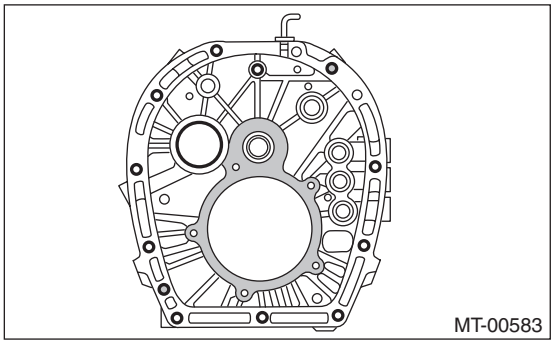

3) Use a height gauge to measure “C1” and “C2” as shown in the figure.

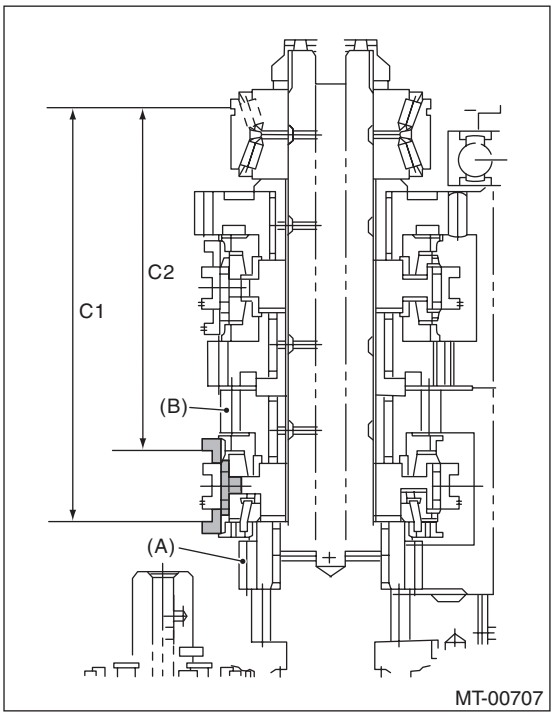

(A) 3rd drive gear
(B) 4th drive gear

(1) Shift the 3rd-4th sleeve to the 4th gear side, push up on the stopper, and measure “C2”.

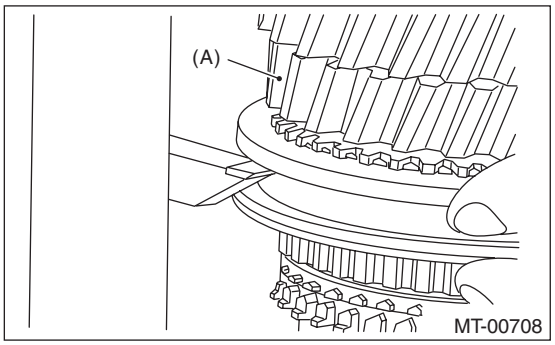

(A) 4th drive gear

NOTE:
- Set the height gauge indicator near the measurement target, and lock dial (1) as shown in the figure.
- Turn dial (2), and set the indicator to the 4th side end surface of the sleeve.
- The measurement is to be performed with two persons, while holding the sleeve straight.
- Turn approximately 72° at a time, and measure the sleeve in 5 locations. Round off the two highest and two lowest measurement values. The remaining center value is used as the measurement value.

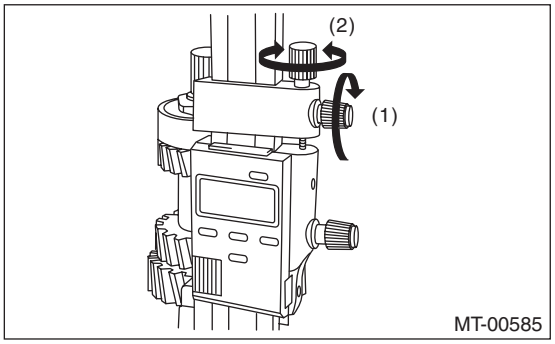

(2) Set the height gauge indicator upside down.

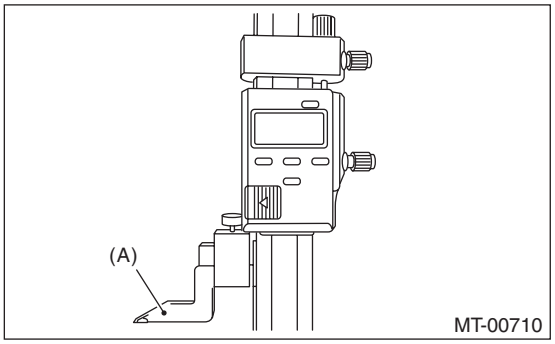

(A) Indicator

(3) Shift the 3rd-4th sleeve to the 3rd drive gear side, push down to the stopper, and measure “C1”.

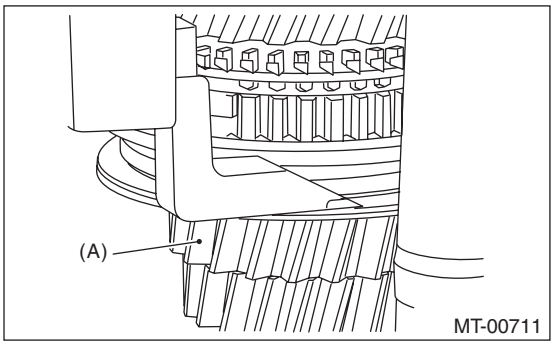

(A) 3rd drive gear

NOTE:
- Set the height gauge indicator near the measurement target, and lock dial (1) as shown in the figure. Turn dial (2), and set the indicator to the 3rd side end surface of the sleeve.
- Turn approximately 72° at a time, and measure the sleeve in 5 locations. Round off the two highest and two lowest measurement values. The remaining center value is used as the measurement value.

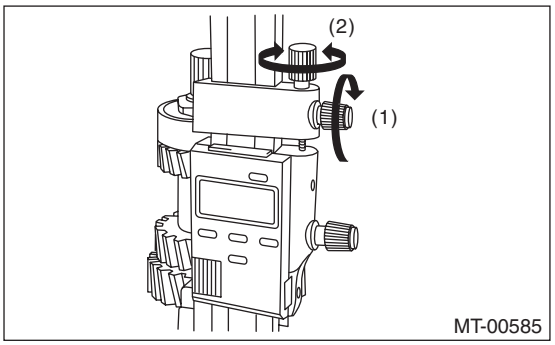

4) According to both of the measurements, calculate the neutral position of the 3rd-4th sleeve. From the following calculation, select a fork rod which matches the calculated value.

Calculation: T = (C1 + C2) / 2

T: 3rd-4th sleeve center position
C1: Measured depth from the main shaft rear bearing snap ring groove to the sleeve end, when shifted to 3rd gear: +55 mm (2.17 in)
C2: Measured depth from the main shaft rear bearing snap ring groove to the sleeve end, when shifted to 4th gear

NOTE:
Attach the indicator upside down in comparison to the setting procedures for the zero point. Add “d1” [Value: 55 mm (2.17 in)] from the figure below to “C1”, and measure “C1”.

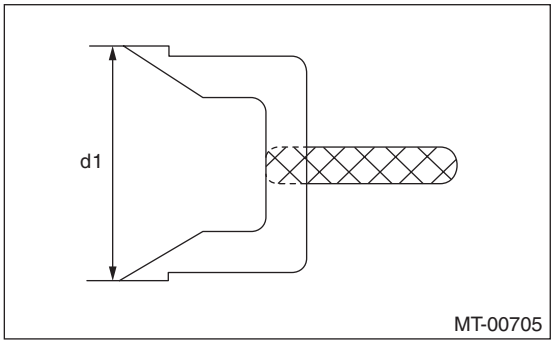

T mm (in)	Lot No. (marking)		
	M.SFT Snap ring 805072010 [t = 1.65 mm (0.065 in)]	M.SFT Snap ring 805072011 [t = 1.95 mm (0.077 in)]	M.SFT Snap ring 805072012 [t = 2.25 mm (0.089 in)]
137.22 — 137.52 (5.4024 — 5.4142)	32809AA171 (none)	32809AA181 (2)	32809AA191 (4)
137.52 — 137.82 (5.4142 — 5.4260)	32809AA161 (1)	32809AA171 (none)	32809AA181 (2)
137.82 — 138.12 (5.4260 — 5.4379)	32809AA141 (3)	32809AA161 (1)	32809AA171 (none)
T = Thickness			

3. 5TH-6TH FORK ROD SELECTION

NOTE:
In the following conditions, perform the procedures below.
- Main shaft replacement
- 3rd to 6th drive gear and bushing replacement
- 3rd to 6th synchro ring assembly replacement
- 3rd-4th hub and sleeve assembly replacement
- 5th-6th hub and sleeve assembly replacement

1) Insert the main shaft assembly into the adapter plate.
2) Set the height gauge to the adapter plate. Lower the height gauge indicator to the upper face of the snap ring groove or the upper side of the main rear bearing. Set to zero point.
ST 18853AA000 HEIGHT GAUGE

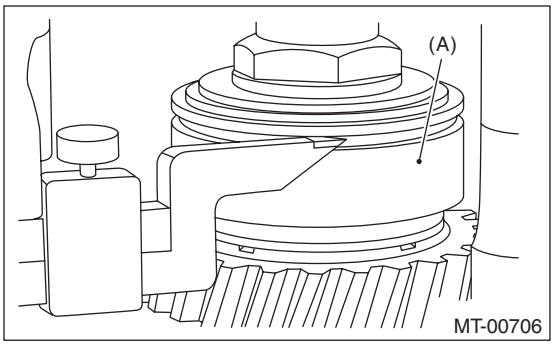

(A) Ball bearing

NOTE:
- The height gauge will be set on the adapter plate during the measurement. Use a scraper to remove any gasket material remaining on the end face.
- During measurement, do not place the height gauge in the shaded area shown in the figure.

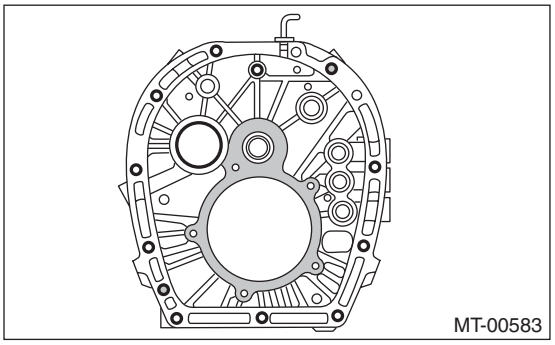

3) Use a height gauge to measure “D1” and “D2” as shown in the figure.

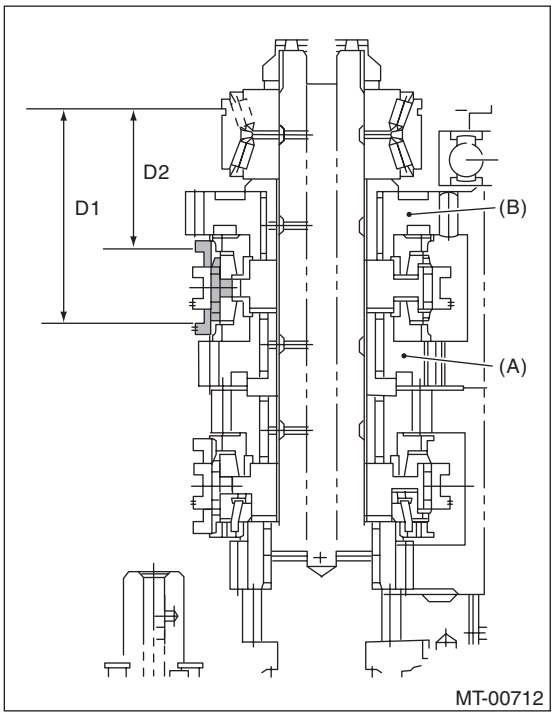

(A) 5th main gear
(B) 6th main gear

(1) Shift the 5th-6th sleeve to the 6th main gear side, push up on the stopper, and measure “D2”.

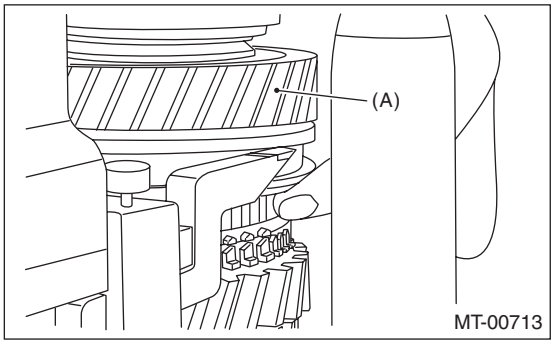

(A) 6th main gear

NOTE:
- Set the height gauge indicator near the measurement target, and lock dial (1) as shown in the figure. Turn dial (2), and set the indicator to the 6th side end surface of the sleeve.
- The measurement is to be performed with two persons, while holding the sleeve straight.
- Turn approximately 72° at a time, and measure the sleeve in 5 locations. Round off the two highest and two lowest measurement values. The remaining center value is used as the measurement value.

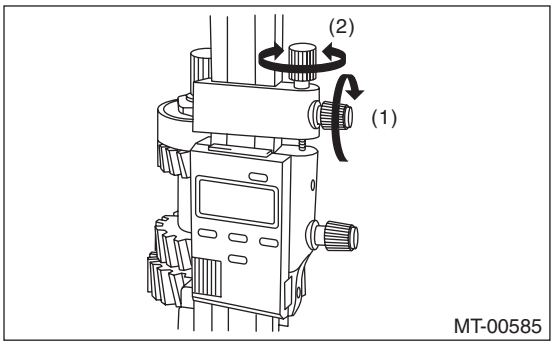

(2) Set the height gauge indicator upside down.

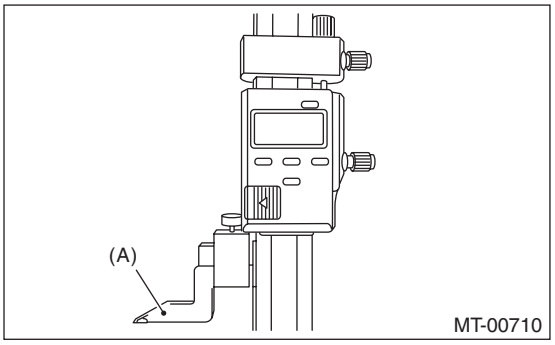

(A) Indicator

(3) Shift the 5th-6th sleeve to the 5th main gear side, push down to the stopper, and measure “D1”.

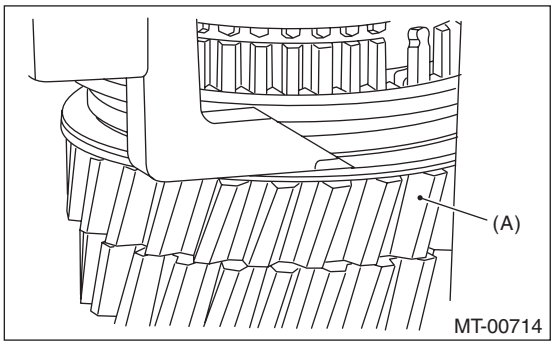

(A) 5th main gear

NOTE:
- Set the height gauge indicator near the measurement target, and lock dial (1) as shown in the figure. Turn dial (2), and set the indicator to the 5th side end surface of the sleeve.
- Turn approximately 72° at a time, and measure the sleeve in 5 locations. Round off the two highest and two lowest measurement values. The remaining center value is used as the measurement value.

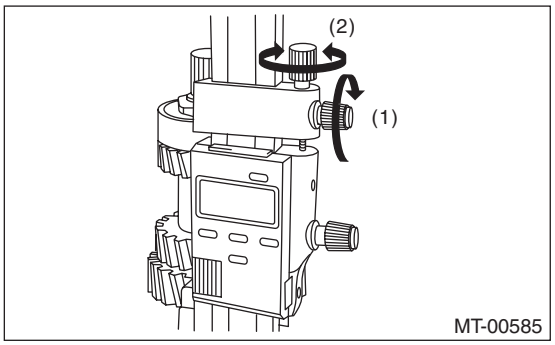

4) According to both of the measurements, calculate the neutral position of the 5th-6th sleeve. From the following calculation, select a fork rod which matches the calculated value.

Calculation: T = (D1 + D2) / 2

T: 5th-6th sleeve center position

D1: Measured length from the shaft rear bearing snap ring groove to the sleeve groove end, when shifted to 5th gear [Value: +55 mm (2.17 in)]

D2: Measured length from the main shaft rear bearing snap ring groove to the sleeve groove end, when shifted to 6th gear

NOTE:
Attach the indicator upside down in comparison to the setting procedures for the zero point. Add “d1” [Value: 55 mm (2.17 in)] from the figure below to “D1”, and measure “D1”.

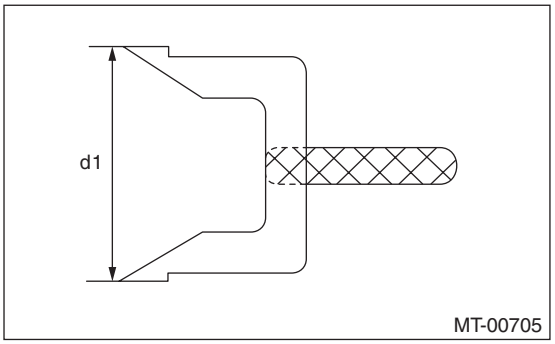

T mm (in)	Lot No. (marking)		
	M.SFT Snap ring 805072010 [t = 1.65 mm (0.065 in)]	M.SFT Snap ring 805072011 [t = 1.95 mm (0.077 in)]	M.SFT Snap ring 805072012 [t = 2.25 mm (0.089 in)]
64.12 — 64.42 (2.5244 — 2.5362)	32945AA021 (none)	32945AA031 (2)	32945AA041 (4)
64.42 — 64.72 (2.5362 — 2.5480)	32945AA011 (1)	32945AA021 (none)	32945AA031 (2)
64.72 — 65.02 (2.5480 — 2.5598)	32945AA001 (3)	32945AA011 (1)	32945AA021 (none)
T = Thickness			

4. REVERSE FORK ROD SELECTION

NOTE:
In the following conditions, perform the procedures below.
- Reverse idler gear replacement.
- Reverse idler gear No. 2 replacement.
- Adapter plate replacement.
- Base replacement.

1) Insert the reverse idler gear assembly into the adapter plate.
2) Tighten the base COMPL attachment bolts.

Tightening torque:
25 N·m (2.5 kgf-m, 18.1 ft-lb)

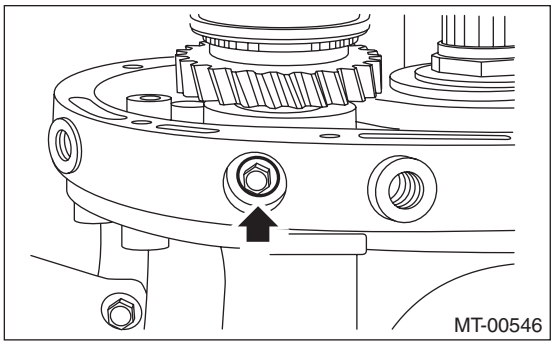

3) Set the height gauge to the adapter plate. Lower the height gauge indicator to the mating surface of the adapter plate and case, and set to zero points.
ST 18853AA000 HEIGHT GAUGE

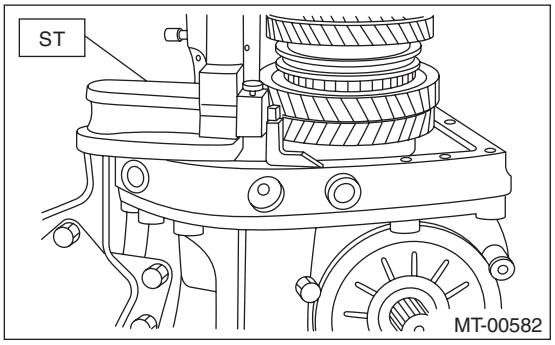

NOTE:
- The adapter plate will be the base point for the measurement. Use a scraper to remove any gasket material remaining on the end face.
- During measurement, do not place the height gauge in the shaded area shown in the figure.

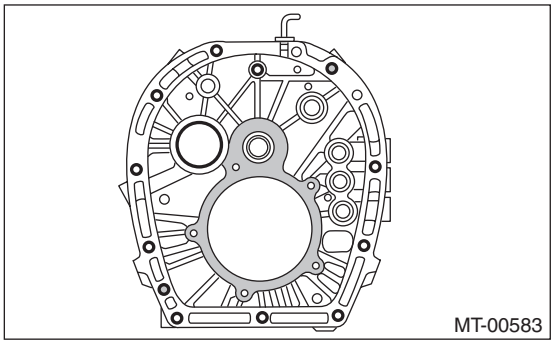

4) Press fit the reverse sleeve to the reverse idler gear No. 2, and measure “T”.

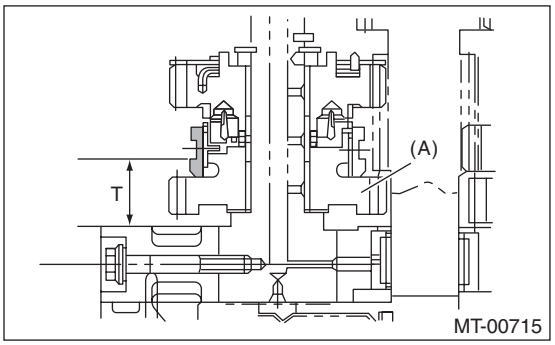

(A) Reverse idler gear No. 2

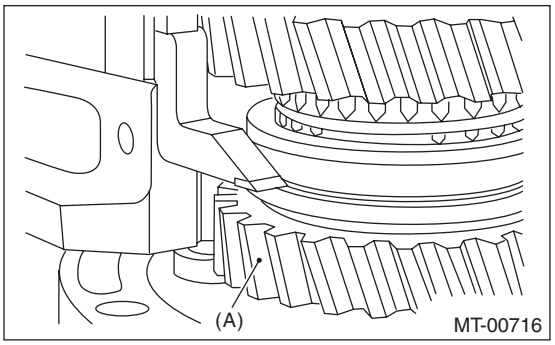

(A) Reverse idler gear No. 2

NOTE:
- Set the height gauge indicator near the measurement target, and lock dial (1) as shown in the figure. Turn dial (2), and set the indicator to the end face of the reverse sleeve side.
- Turn approximately 72° at a time, and measure the sleeve in 5 locations. Round off the two highest and two lowest measurement values. The remaining center value is used as the measurement value.

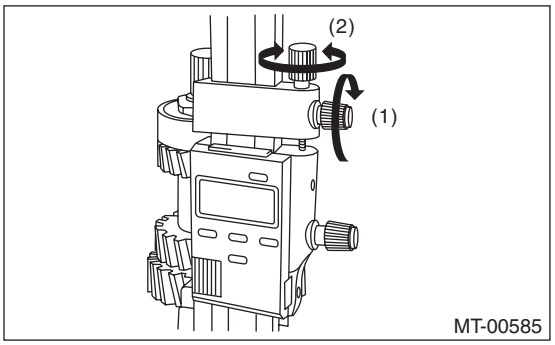

5) Calculate the neutral position of the reverse sleeve according to the measurement. From the following calculation, select a fork rod which matches the calculated value.

Calculation: T + 4.8 mm (0.189 in)

T + 4.8 mm (0.189 in)	Lot No. (marking)
33.50 — 33.80 (1.3189 — 1.3307)	32816AA110 (1)
33.80 — 34.10 (1.3307 — 1.3425)	32816AA130 (none)
34.10 — 34.40 (1.3425 — 1.3543)	32816AA140 (2)
T = Thickness	